Victor Series

With the advent of the era of industrial 4.0, the degree of automation is higher and higher
In our field, the application of automatic welding is more and more widely.
The beveling for automatic welding required: OD Beveling, Facing and Internal beveling
As the pioneer in China, NODHA is proud of push the "Victor" Series to the market.

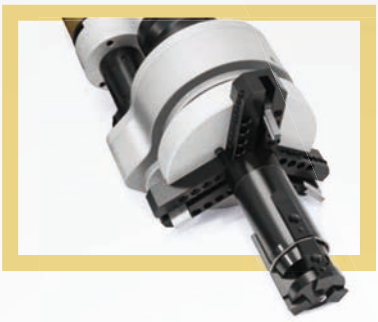

1/ Cutter can hold 3 tool bits process in one time
Automatic welding require the OD Beveling, facing and internal beveling
Only 3 side processing finish in one time can guarantee the precision of beveling
The cutter can install 3 pcs tool bits, meet the demands.

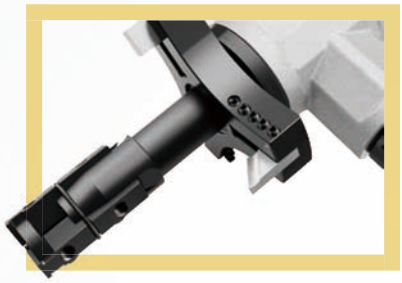

2/ New expanding structure
New designed expanding structure makes the fix more stable
And low failure rate

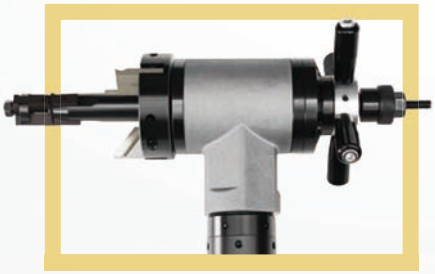

3/ New-design main shaft fixation
There will be smaller gap of the machine.
Performs beveling more smooth, less vibration

V1

Driven Option:

V1 P Air Operated
V1 E Electric Operated, China Motor
V1 B Electric Operated, BOSCH Motor

Tool Bits

Standard Tool
V Type Prep.
U Type Prep.
Facing
Inside Beveling
*Consult with us for special demand

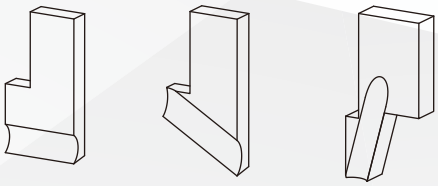

Standard Supply:

Machine, Driven motor,
full set expanding blocks
3 pcs tool bits
(1 Facing tool, 1x30deg. Beveling,
1x37.5deg Beveling)

Specification

Model	V1P	V1E	V1B
Driven	Pneumatic	Electric	Bosch Motor
Power Supply	900L/Min@0.6Mpa	220-240V 1PH 50/60HZ	220-240V 1PH 50/60HZ
Motor Power	1 HP	720W	850W
Clamping Range(ID)	16-25	16-25	16-25
Working Range(OD)	1"(33.4mm)	1"(33.4mm)	1"(33.4mm)
Wall Thickness	≤8mm	≤8mm	≤8mm
Rotation Speed	66r/min	52r/min	48r/min
Working Weight	7kg	8kg	8kg
Shipping Weight	14kg	16kg	16kg
Packing Size	540*410*170mm	540*410*170mm	540*410*170mm
Tool Number	2	2	2

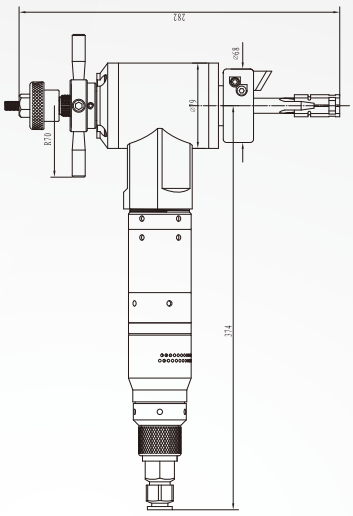

V3

Driven Option:

V3 P Air Operated
V3 E Electric Operated, China Motor
V3 B Electric Operated, BOSCH Motor

Tool Bits

Standard Tool
V Type Prep.
U Type Prep.
Facing
Inside Beveling
*Consult with us for special demand

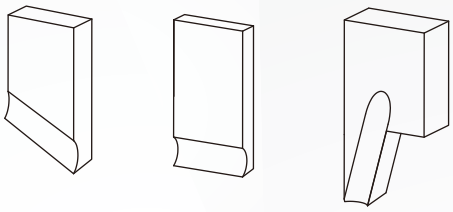

Standard Supply:

Machine, Driven motor,
full set expanding blocks
3 pcs tool bits
(1 Facing tool, 1x30deg. Beveling,
1x37.5deg Beveling)

Specification

Model	V3P	V3E	V3B
Driven	Pneumatic	Electric	Bosch Motor
Power Supply	900L/Min@0.6Mpa	220-240V 1PH 50/60HZ	220-240V 1PH 50/60HZ
Motor Power	1 HP	720W	850W
Clamping Range(ID)	25-76	25-76	25-76
Working Range(OD)	3"(88.9mm)	3"(88.9mm)	3"(88.9mm)
Wall Thickness	≤15mm	≤15mm	≤15mm
Rotation Speed	66r/min	52r/min	48r/min
Working Weight	8.5kg	9kg	9kg
Shipping Weight	15kg	16kg	16kg
Packing Size	540*410*170mm	540*410*170mm	540*410*170mm
Tool Number	3	3	3

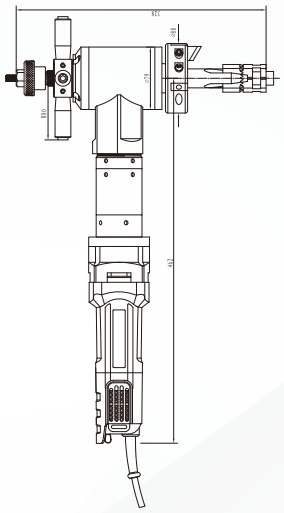

V6

Driven Option:

V6 P Air Operated
V6 E Electric Operated, China Motor
V6 B Electric Operated, BOSCH Motor

Tool Bits

Standard Tool
V Type Prep.
U Type Prep.
Facing
Inside Beveling
*Consult with us for special demand

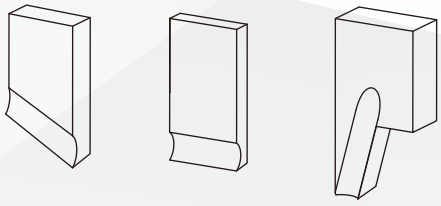

Standard Supply:

Machine, Driven motor,
full set expanding blocks
3 pcs tool bits
(1 Facing tool, 1x30deg. Beveling,
1x37.5deg Beveling)

Specification

Model	V6P	V6E	V6B
Driven	Pneumatic	Electric	Bosch Motor
Power Supply	900L/Min@0.6Mpa	220-240V 1PH 50/60HZ	220-240V 1PH 50/60HZ
Motor Power	1 HP	1050W	1000W
Clamping Range(ID)	60-159	60-159	60-159
Working Range(OD)	6"(168.28mm)	6"(168.28mm)	6"(168.28mm)
Wall Thickness	≤20mm	≤20mm	≤20mm
Rotation Speed	61r/min	36r/min	38r/min
Working Weight	16kg	17kg	17kg
Shipping Weight	29kg	31kg	31kg
Packing Size	560*550*250mm	560*550*250mm	560*550*250mm
Tool Number	3	3	3

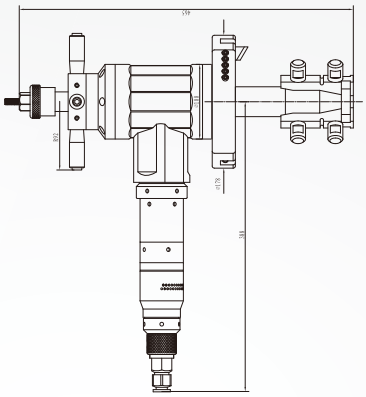

V8

Driven Option:

V8 P Air Operated
V8 E Electric Operated, China Motor

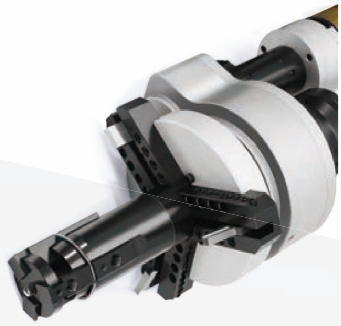

Tool Bits

Standard Tool
V Type Prep.
U Type Prep.
Facing
Inside Beveling
*Consult with us for special demand

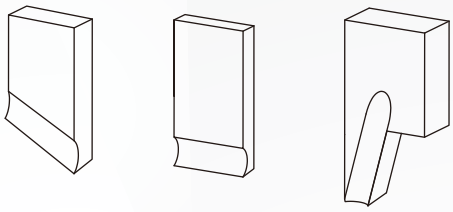

Standard Supply:

Machine, Driven motor,
full set expanding blocks
3 pcs tool bits
(1 Facing tool, 1x30deg. Beveling,
1x37.5deg Beveling)

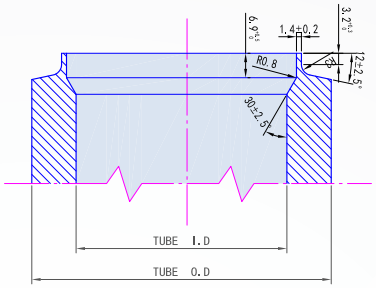

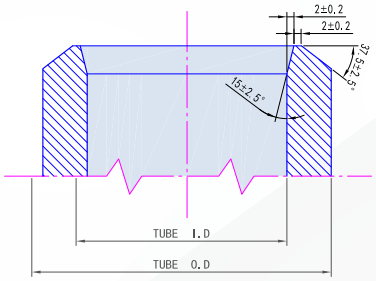

Specification

Model	V8P	V8E
Driven	Pneumatic	Electric
Power Supply	1200L/Min@0.6Mpa	220-240V 1PH 50/60HZ
Motor Power	1.5 HP	1200W
Clamping Range(ID)	65-210mm	65-210mm
Working Range(OD)	8”(219.08mm)	8”(219.08mm)
Wall Thickness	≤20mm	≤20mm
Rotation Speed	50r/min	24r/min
Working Weight	26kg	28kg
Shipping Weight	41kg	44kg
Packing Size	650*280*250mm	650*280*250mm
Tool Number	3	3

V14

Driven Option:

V14 P Air Operated
V14 E Electric Operated, China Motor

Tool Bits

Standard Tool
V Type Prep.
U Type Prep.
Facing
Inside Beveling
*Consult with us for special demand

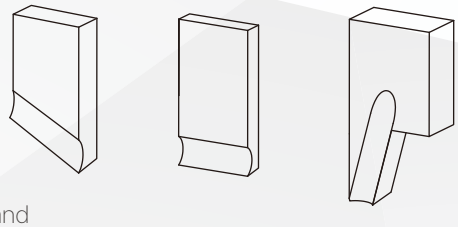

Standard Supply:

Machine, Driven motor,
full set expanding blocks
3 pcs tool bits
(1 Facing tool, 1x30deg. Beveling, 1x37.5deg Beveling)

Specification

Model	V14P	V14E
Driven	Pneumatic	Electric
Power Supply	1200L/Min@0.6Mpa	220-240V 1PH 50/60HZ
Motor Power	1.5 HP	1500W
Clamping Range(ID)	145-340mm	145-340mm
Working Range(OD)	14"(355.6mm)	14"(355.6mm)
Wall Thickness	≤20	≤20
Rotation Speed	18r/min	20r/min
Working Weight	46kg	48kg
Shipping Weight	68kg	70kg
Packing Size	800*430*410mm	830*430*410mm
Tool Number	2 or 3	2 or 3